Rotisol

MF975-2G

Olympia Garden



DESIGN

Rotisol's traditional rustic-style rotisserie, the Olympia Garden, is an attractive show-piece for any indoor or outdoor residential kitchen and is used by chefs in Michelins star restaurants around the world. The visible flames from Rotisol's patented burners spread up the porcelain wicks creating a spectacular visual that can be seen through the front and side glass doors. Spits are driven by an elegant system of chains and pulleys, rotating at 2 ½ times per minute, ensuring perfectly cooked, self-basting poultry, meat, vegetables and fish. The optional Vertical Spit System with its choice of various hanging accessories expands the menu possibilities even more and adds additional visual appeal.

FEATURES

- Rotisol patented burners
- Energy efficient, tempered K-glass front and side doors
- Decorative roof included
- Pre-installed vertical spit system
- Independent motor for each spit
- Equipped with bottom drip tray with built-in drainage
- Powerful halogen lamps
- Delivered with 2 prongless spits (CUI9)



MF975-2G-LUX
black porcelain enamel and brass

TECHNICAL DETAILS

Overview of some of the standard features.

	Cast iron with ceramic wicks provides a magnificent display of flames		Visible rustic pulleys and drive chains for added front- of-house appeal		Pre-installed vertical spit system allows for vertical cooking
	Decorative terracotta firebricks absorb and radiate the heat		Gas knobs in brass or chrome finish allow fine tuning of the gas flow	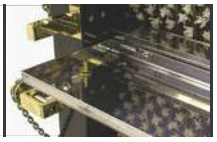	Middle drip pan allows separation of products to prevent cross contamination

ACCESSORIES

A wide variety of accessories are available. Please consult us.

CUI9 Anti-cutting prong less V-spit.		**BP9** Chicken spit.		**BRC9** Rectangular basket spit.	
BS9 Spit for ham / turkey.		**BRRO9** Roast-clamp spit.		**BA9** Lamb/suckling-pig spit.	
BCR9 Spatchcock chicken basket.		**DEC** Spit mover.		**BPOR9** Porchetta spit.	

Rotisol
MF975-2G

Olympia Garden

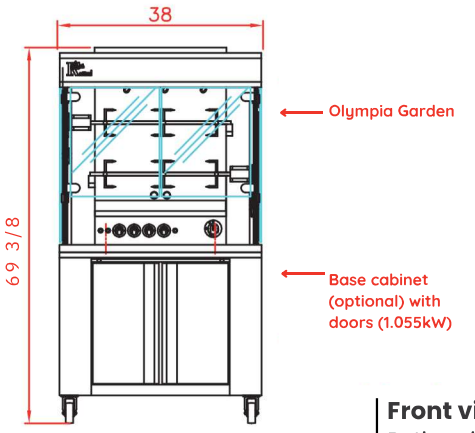

Front view
Rotisserie with roof

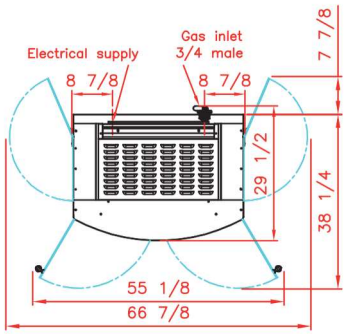

Top view
Rotisserie with roof

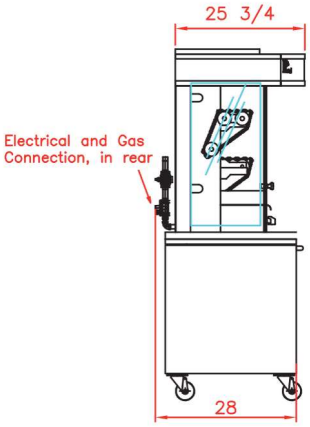

Side view
Rotisserie with roof

HANGING ACCESSORIES

	**PLAT 255** Suspended plate
	**CHAUDRON** Soup pan
	**PRECPI** Rectangular basket
	**PRONPI** Round basket
	**BA** Sausage spit

	**SBT** Carousel for small kebab
	**BT** Kebab skewer
	**S** S hook (meat hook)
	**BP** Basket (clamp) spit



MF975-2G-SS
stainless steel and chrome

SPECIFICATIONS

Capacity	4/6 chickens
Gas power	27500 BTU/h
Power supply	208-240V~60Hz
Electrical power	1.6 Amps 0.32 kW
Weight and size (HxDxW)	420 lbs ; 69 3/8 x 29 1/2 x 38 inches
Shipping weight and size	532 lbs ; 77 1/4 x 30 x 42 1/8 inches
Warranty	1 year parts and labor

Intertek

Intertek

Rotisol France, Inc.
21618 Marilla St, CHATSWORTH, CA 91311
info@rotisolusa.com Ph :310 671 7254